LAMP SERIES

10x10 Led Built-in Type

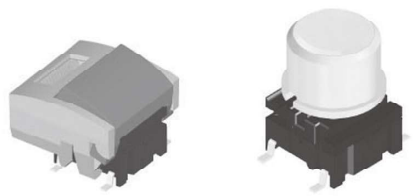

HOW TO ORDER

L S □ □ □ — □ □

- Light Switch
- Product Type: 10=10x10
- Serial Number
- Operating Force: C:250gf, F:300gf
- LED Color: N:Without, R:Red, Y:Yellow, G:Green, U:Blue, W:White, O:Orange, R/U:Red/Bule

Specification

Items		Standard
Operating temperature range		-25℃ to +85℃
Electrical performance	Rating	0.1A. 30V DC
	Insulation resistance	100MΩ min. 250V DC
	Dielectric strength	AC250V(50-60Hz) for 1 min.
	Contact resistance	100mΩ max.
Durability	Lifetime	100,000 Cycles Min
Mechanical performance	Operating force	C:250gf F:300gf
	Travel	0.3 ± 0.1mm

Diagram

No.	Dimensions	Circuit Diagram / Pad Layout
1	● LS1005 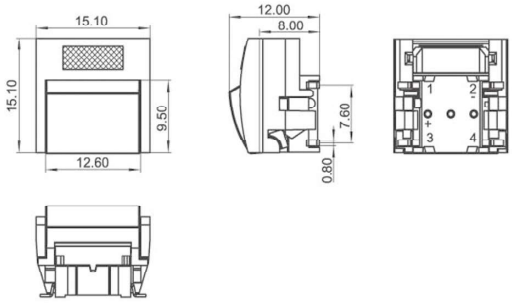	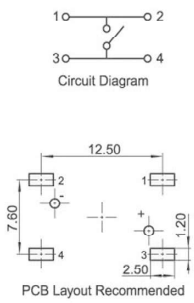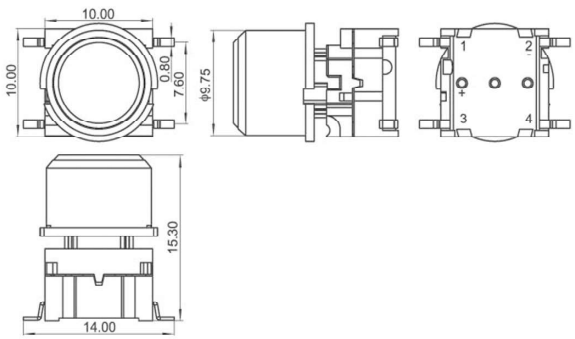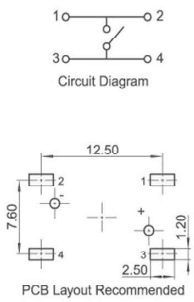
2	● LS1006